DocuSign Envelope ID: 90CA573C-A947-4DCB-A157-F8C379D0DA9B

PROJECT REFERENCE NO.	SHEET NO.
R-5843	SIG. 2.0

EDI MODEL 2018ECL-NC CONFLICT MONITOR PROGRAMMING DETAIL

(remove jumpers and set switches as shown)

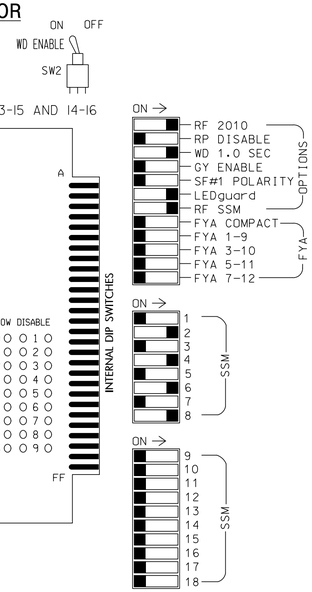

REMOVE JUMPERS AS SHOWN

NOTES:

1. Card is provided with all diode jumpers in place. Removal of any jumper allows its channels to run concurrently.
2. Ensure jumpers SEL2-SEL5 and SEL9 are present on the monitor board.
3. Ensure that Red Enable is active at all times during normal operation.
4. Connect serial cable from conflict monitor to comm. port 1 of 2070 controller. Ensure conflict monitor communicates with 2070.

NOTES

1. To prevent "flash-conflict" problems, insert red flash program blocks for all unused vehicle load switches in the output file. The installer shall verify that signal heads flash in accordance with the Signal Plans.
2. Program phases 4 and 8 for Dual Entry.
3. Enable Simultaneous Gap-Out for all Phases.
4. Program phases 2 and 6 for Startup In Green.
5. Program phases 2, 4, 6, and 8 for Startup Ped Call.
6. Program phases 2 and 6 for Yellow Flash.

EQUIPMENT INFORMATION

CONTROLLER.....2070
CABINET.....332
SOFTWARE.....ECONOLITE OASIS 3.03.32E
OR LATEST APPROVED VERSION
CABINET MOUNT.....BASE
OUTPUT FILE POSITIONS...12
LOAD SWITCHES USED.....S2,S3,S5,S6,S8,S9,S11,S12
PHASES USED.....2,2PED,4,4PED,6,6PED,8,8PED,9*
OVERLAP P.....2+4+6+8
PED OVERLAP A.....4+9
PED OVERLAP B.....8+9

* Phase used only in Preempt

SIGNAL HEAD HOOK-UP CHART

LOAD SWITCH NO.	S1	S2	S3	S4	S5	** S6	S7	S8	S9	S10	S11	** S12
CMU CHANNEL NO.	1	2	13	3	4	14	5	6	15	7	8	16
PHASE	1	2	2 PED	3	4	4 PED (POLA)	5	6	6 PED	7	8	8 PED (PØLB)
SIGNAL HEAD NO.	NU	21,22 23,24	P21, P22	NU	41,42	P41, P42	NU	61,62	P61, P62	NU	81,82 83	P81, P82
RED		128			101			134			107	
YELLOW		129			102			135			108	
GREEN		130			103			136			109	
RED ARROW												
YELLOW ARROW												
GREEN ARROW												
✋			113			104			119			110
🚶			115			106			121			112

NU = Not Used
** See Ped Overlap programming Detail on Sheet 3.

COUNTDOWN PEDESTRIAN SIGNAL OPERATION

Countdown Ped Signals are required to display timing only during Ped Clearance Interval. Consult Ped Signal Module user's manual for instructions on selecting this feature.

INPUT FILE POSITION LAYOUT

(front view)

		1	2	3	4	5	6	7	8	9	10	11	12	13	14
FILE "I"	U	SLOT EMPTY	Ø2 2A	SLOT EMPTY	SLOT EMPTY	SLOT EMPTY	Ø4 4A	SLOT EMPTY	SLOT EMPTY	SLOT EMPTY	SLOT EMPTY	SLOT EMPTY	Ø2 PED DC ISOLATOR	Ø6 PED DC ISOLATOR	FS DC ISOLATOR
	L		NOT USED				NOT USED						Ø4 PED Ø9 PED DC ISOLATOR	Ø8 PED Ø9 PED DC ISOLATOR	ST DC ISOLATOR
FILE "J"	U	SLOT EMPTY	Ø6 6A	SLOT EMPTY	SLOT EMPTY	SLOT EMPTY	Ø8 8A	SLOT EMPTY	SLOT EMPTY	SLOT EMPTY	SLOT EMPTY	SLOT EMPTY	SLOT EMPTY	SLOT EMPTY	PRE1* AC ISOLATOR
	L		NOT USED				NOT USED								NOT USED

EX.: 1A, 2A, ETC. = LOOP NO.'S

FS = FLASH SENSE
ST = STOP TIME
PRE1 = RR PREEMPT

* See AC Isolator Programming Detail sheet 2.

INPUT FILE CONNECTION & PROGRAMMING CHART

LOOP NO.	LOOP TERMINAL	INPUT FILE POS.	PIN NO.	INPUT ASSIGNMENT NO.	DETECTOR NO.	NEMA PHASE	CALL	EXTEND	FULL TIME DELAY	STRETCH TIME	DELAY TIME
2A	TB2-5,6	I2U	39	1	2	2	Y	Y			
4A	TB4-9,10	I6U	41	3	4	4	Y	Y			5
6A	TB3-5,6	J2U	40	2	6	6	Y	Y			
8A	TB5-9,10	J6U	42	4	8	8	Y	Y			5
PED PUSH BUTTONS											
P21,P22	TB8-4,6	I12U	67	29	PED 2	2 PED					
P41,P42	TB8-5,6	I12L	69	31	PED 4	4 PED PED 9					
P61,P62	TB8-7,9	I13U	68	30	PED 6	6 PED					
P81,P82	TB8-8,9	I13L	70	32	PED 8	8 PED PED 9					

NOTE:
INSTALL DC ISOLATORS IN INPUT FILE SLOTS I12 AND I13.

INPUT FILE POSITION LEGEND: J2L
FILE J
SLOT 2
LOWER

PED OVERLAP PROGRAMMING DETAIL

(program controller as shown below)

FROM MAIN MENU PRESS '8' (OVERLAPS), THEN '2' (PEDESTRIAN OVERLAP SETTINGS).

```
PAGE 1: PEDESTRIAN OVERLAP 'A' SETTINGS
PHASE:          ¦123456789101112131415 16
PED OVL PARENTS:¦   X     X
```

PRESS '+'

```
PAGE 1: PEDESTRIAN OVERLAP 'B' SETTINGS
PHASE:          ¦123456789101112131415 16
PED OVL PARENTS:¦        XX
```

OVERLAP PROGRAMMING COMPLETE

PHASE SEQUENCE PROGRAMMING DETAIL

(program controller as shown below)

FROM MAIN MENU PRESS '4' (PHASE SEQUENCE)

```
PHASE SEQUENCE: PAGE 1  NEXT: PAGES)
RNG¦LEAD   BARRIER 1  X-LAG¦LEAD   BARRIER 2  X-LAG¦LEAD   BARRIER 3  X-LAG
1  ¦0     2     0     0  ¦0     4     0     0  ¦9     0     0     0
2  ¦0     6     0     0  ¦0     8     0     0  ¦0     0     0     0
3  ¦0     0     0     0  ¦0     0     0     0  ¦0     0     0     0
4  ¦0     0     0     0  ¦0     0     0     0  ¦0     0     0     0
```

NC Dept of Transportation
Division of Highways
Final Drawing Date: 1/25/2019
DocuSigned by: R. N. Linson
E13B8B7847224BF...
ITS & Signals Unit

THIS ELECTRICAL DETAIL IS FOR
THE SIGNAL DESIGN: 14-1306
DESIGNED: JUNE 2018
SEALED: 1/18/2018
REVISED:

New Installation - Electrical Detail - Sheet 1 of 3

DOCUMENT NOT CONSIDERED FINAL UNLESS ALL SIGNATURES COMPLETED

ELECTRICAL AND PROGRAMMING DETAILS FOR:

EVERETT STREET
AT
SR 1336 (DEPOT STREET)

DIVISION 14 SWAIN COUNTY BRYSON CITY

PLAN DATE: JUNE 2018 REVIEWED BY: SL PHILLIPS
PREPARED BY: SP PENNINGTON REVIEWED BY:

REVISIONS	INIT.	DATE

Prepared In the Offices of:
Mobility and Safety Division
STATE OF NORTH CAROLINA
DEPARTMENT OF TRANSPORTATION
ITS & Signals Management Section
750 N.Greenfield Pkwy,Garner,NC 27529

SEAL
NORTH CAROLINA PROFESSIONAL SEAL 032607 ENGINEER STACIE L. PHILLIPS
DocuSigned by: 1/18/2019
DC87A596ED0B437...
SIGNATURE DATE
SIG. INVENTORY NO. 14-1306

PLANS PREPARED IN THE OFFICE OF:
Kimley»Horn
NC License #F-0102
421 Fayetteville Street, Suite 600
Raleigh, NC 27601
(919) 677-2000

1/18/2019 12:29:15 PM susan.pennington K:\RAL_Roadway\01103387 - Div 14 (R-5843 Bryson Int)\Traffic Signal\S4 - Signal Design\14-1306_2018el.dgn