DocuSign Envelope ID: F282C47B-248B-4AF2-8985-7229EC284258

Kimley»Horn

PROJECT REFERENCE NO.	SHEET NO.
R-5843	UC-3C
DESIGNED BY: DGB	
DRAWN BY: DGB	
CHECKED BY: NDR	
APPROVED BY:	
REVISED:	
NORTH CAROLINA DEPARTMENT OF TRANSPORTATION	
UTILITIES ENGINEERING SEC. PHONE:(919)707-6690 FAX:(919)250-4151	UTILITY CONSTRUCTION PLANS ONLY

NORTH CAROLINA PROFESSIONAL SEAL 040303 ENGINEER DANIEL G. BULA
DocuSigned by: Daniel G. Bula
C6D70A1121DD4F5...
7/24/2019

UTILITY CONSTRUCTION

NOTES:

1. THIS DETAIL SHOWS THE TYPICAL FINAL FIRE HYDRANT CONFIGURATION AFTER INSTALLATION OF A PROPOSED FIRE HYDRANT, RECONNECTION OF AN EXISTING FIRE HYDRANT, OR RELOCATION OF A FIRE HYDRANT.
2. KEEP DRAIN PORTS FREE FROM OBSTRUCTION.
3. RESTRAIN ALL PIPE JOINTS AND FITTINGS. ACCEPTABLE TYPES OF RESTRAINT INCLUDE RESTRAINING GLANDS; RESTRAINED, PUSH-ON JOINTS; AND 3/4" BITUMINOUS COATED, ALL-THREAD RESTRAINING RODS. THRUST BLOCKS ARE NOT AN ACCEPTABLE TYPE OF RESTRAINT.
4. FOR RELOCATED OR RECONNECTED FIRE HYDRANTS,VERIFY THE VALVE IS RESTRAINED TO THE MAIN. PROVIDE APPROPRIATE RESTRAINT.
5. HYDRANT LOCATION APPLIES TO PROPOSED AND RELOCATED FIRE HYDRANTS.
6. LOCATE FIRE HYDRANT WITH 3' HORIZONTAL CLEARANCE FROM ABOVE GROUND OBJECTS.
7. PROVIDE A MINIMUM OF 3' COVER OVER ALL SECTIONS OF HORIZONTAL PIPE. USE FITTINGS AS NECESSARY.
8. TAPPING SLEEVES MAY BE USED ON EXISTING MAINS IN LIEU OF DI TEES.
9. LOCATE FIRE HYDRANT OUTSIDE OF THE VEHICLE RECOVERY AREA, ADJACENT TO THE R/W LINE, OR IN A PROTECTED AREA.

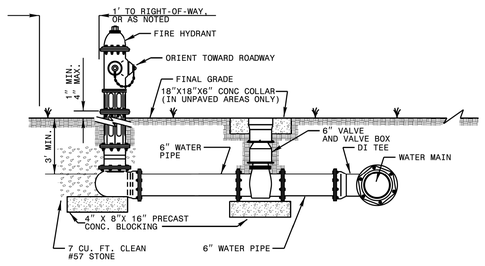

STATE OF NORTH CAROLINA DEPT. OF TRANSPORTATION DIVISION OF HIGHWAYS RALEIGH, N.C.

1-18

ROADWAY STANDARD DRAWING FOR **FIRE HYDRANT**

SHEET 1 OF 1 **1515.02**

1 NCDOT FIRE HYDRANT DETAIL
Not to Scale

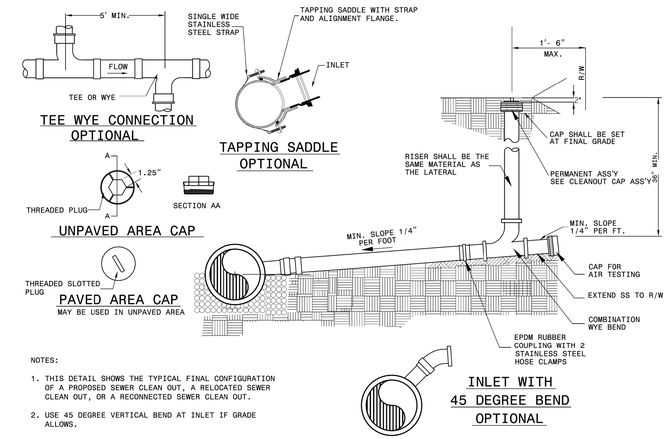

NOTES:

1. THIS DETAIL SHOWS THE TYPICAL FINAL CONFIGURATION OF A PROPOSED SEWER CLEAN OUT, A RELOCATED SEWER CLEAN OUT, OR A RECONNECTED SEWER CLEAN OUT.
2. USE 45 DEGREE VERTICAL BEND AT INLET IF GRADE ALLOWS.

STATE OF NORTH CAROLINA DEPT. OF TRANSPORTATION DIVISION OF HIGHWAYS RALEIGH, N.C.

1-18

ROADWAY STANDARD DRAWING FOR **SEWER CLEAN OUT**

SHEET 1 OF 1 **1520.01**

2 NCDOT SEWER CLEAN OUT DETAIL
Not to Scale

GENERAL NOTES:

1. THIS STANDARD DETAIL DESCRIBES THE USE OF HORSESHOE TYPE and CORED MANHOLES WITH A CAST-IN-PLACE BOTTOM.
2. USE HORSESHOE TYPE MANHOLE ONLY WITH THE PERMISSION OF THE ENGINEER.
3. FOR HORSESHOE TYPE MANHOLES, WRAP THE PIPE WITH BUTYL RUBBER GASKET, AND SEAL WITH NONSHRINKING GROUT.

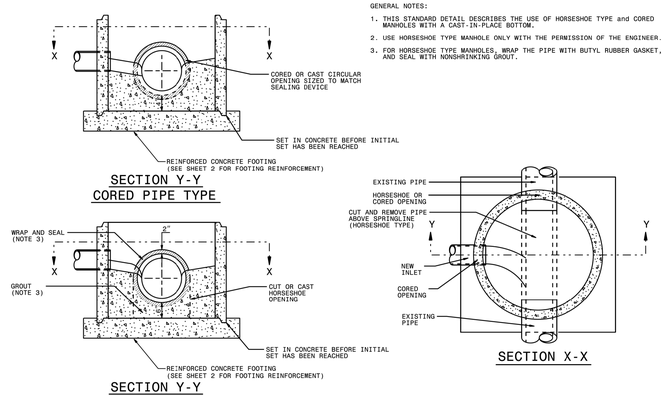

STATE OF NORTH CAROLINA DEPT. OF TRANSPORTATION DIVISION OF HIGHWAYS RALEIGH, N.C.

1-18

ROADWAY STANDARD DRAWING FOR **PRECAST CONCRETE SANITARY SEWER MANHOLE WITH CAST-IN-PLACE BOTTOM**

SHEET 1 OF 2 **1525.06**

3 NCDOT PRECAST SEWER MANHOLE DETAIL (1 OF 2)
Not to Scale

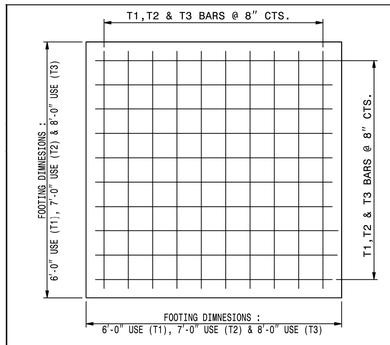

REINFORCED CONCRETE FOOTING FOR 5' PRECAST MANHOLE OR 4' PRECAST MANHOLE

BILL OF MATERIAL FOR 6'-0" FOOTING				
BAR	SIZE	LENGTH	NO.	WT. lbs.
T1	#5	5'-6"	18	103
CLASS "A" CONC. YD^3 9" THICK				1.00

BILL OF MATERIAL FOR 7'-0" FOOTING				
BAR	SIZE	LENGTH	NO.	WT. lbs.
T2	#5	6'-6"	20	136
CLASS "A" CONC. YD^3 9" THICK				1.36
CLASS "A" CONC. YD^3 12" THICK				1.82

BILL OF MATERIAL FOR 8'-0" FOOTING				
BAR	SIZE	LENGTH	NO.	WT. lbs.
T3	#5	7'-6"	24	188
CLASS "A" CONC. YD^3 12" THICK				2.37

PLACE REINFORCING STEEL SO THAT STEEL IS PLACED A MIN. OF 2" AND A MAX. OF 4" FROM THE TOP OF THE SLAB.

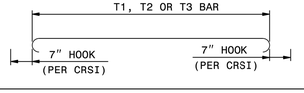

STATE OF NORTH CAROLINA DEPT. OF TRANSPORTATION DIVISION OF HIGHWAYS RALEIGH, N.C.

1-18

ROADWAY STANDARD DRAWING FOR **PRECAST CONCRETE SANITARY SEWER MANHOLE WITH CAST-IN-PLACE BOTTOM**

SHEET 2 OF 2 **1525.06**

4 NCDOT PRECAST SEWER MANHOLE DETAIL (2 OF 2)
Not to Scale

7/23/2019 K:\RAL_Roadway\OI\036387 - Div 14 (R-5843 Bryson Int)\Utilities\Engineer\UC\Proj\280_031_R-5843_uc_details_03X.dgn